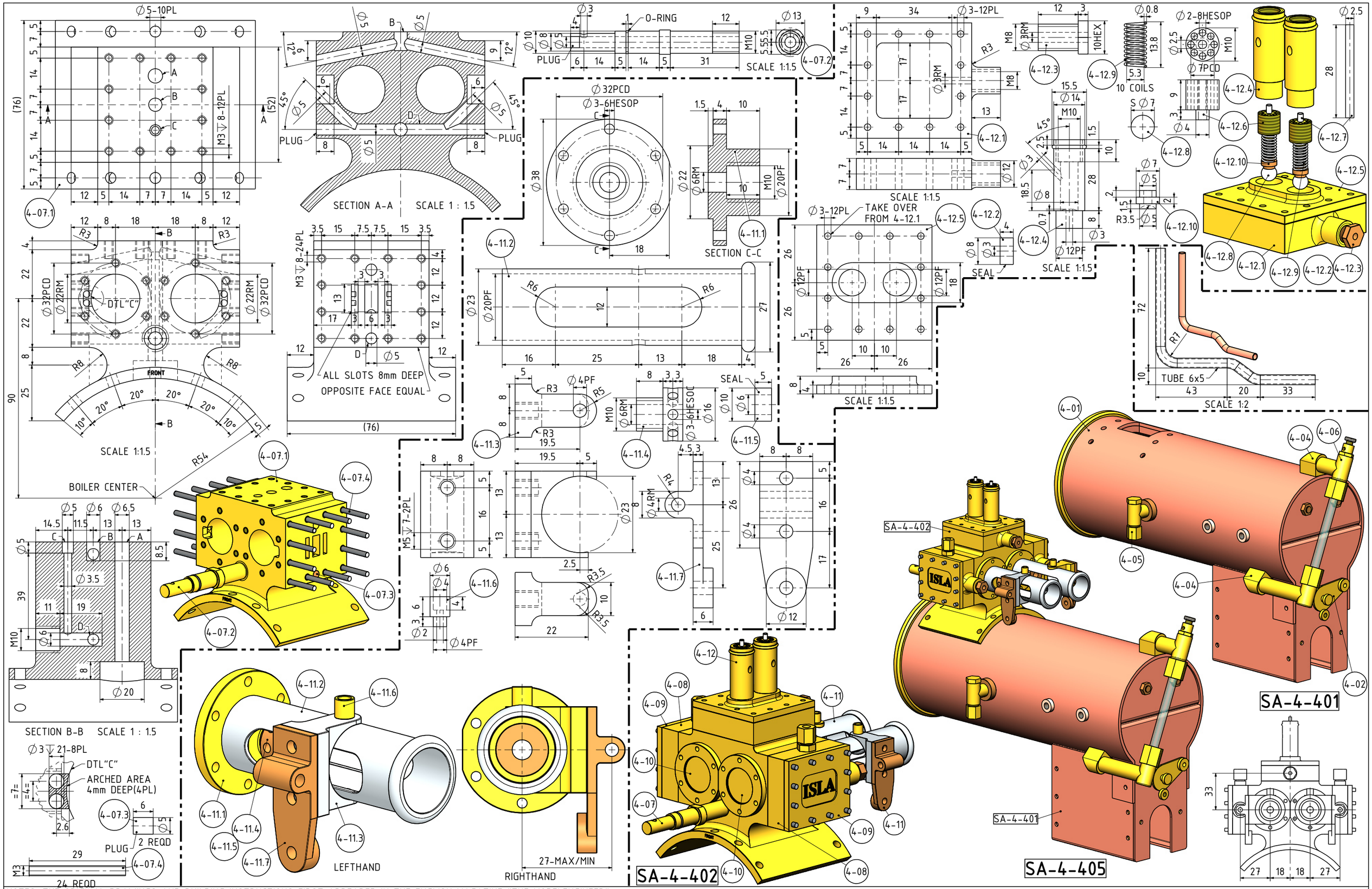

NOTES: THE ORIGINAL DRAWINGS AND BUILDING INSTRUCTIONS FIRST APPEARED IN THE ENGLISH MAGAZINE "THE MODELENGINEER"

TITLE
A FREELANCE MODEL OF A "FODEN" GAS FIRED OVERTYPE STEAM LORRY

DRAWING CONTENTS
PARTS AND ASSEMBLIES

PROJECT No 08-15-00

JDW DRAUGHTING SERVICES
J.A.M. DE WAAL. 12 BRIGHTWELL STREET PAPAKURA 2110. NEW ZEALAND. PHONE: 0064 09 2988815. MOB: 0211791000 E-MAIL: dewaal@xtra.co.nz.

PROJECTION | JDWDS | MODEL SCALE: 1:6
DATE OCTOBER 2020 | DWG SCALE: 1:1 @A3 OR AS SHOWN
Copyright © J.A.M. DE WAAL PAPAKURA NZ
SHEET: 13 OF 18 | A3 | No: 08-15-00-SHT13

DRAWINGS ARE FOR PERSONAL USE ONLY NOT FOR COMMERCIAL PURPOSES